12mm Square Tact Switch (Vertical, TH Type)

TSG-79/7AT-XXXH

TS - Tact Switch
G - G Serious
79 / 7A - Type
T – TH Type
XXX - Action Force (gram)
H - With Post (Optional)

SPECIFICATIONS

Mechanical Life:	100,000 cycles
Operating Force:	180g±30g
Travel:	0.25±0.1mm
Rating:	50mA 12V DC
Dielectric Withstanding:	250V AC/minute
Insulator Resistance:	≥ 100 MΩ at 100V
Contact Resistance:	≤ 100 mΩ/Contact
Operating temperature:	-25℃ ~ +85℃
Storage temperature:	-40℃ ~ +85℃

Material

Base:	PA66/PA6T, UL94V-0
Contact material:	Phosphor Bronze
Contact Spring Plating:	Stainless Steel/Silver Plating

Physical Picture	Outline Drawing	Circuit
TSG-79T-180H	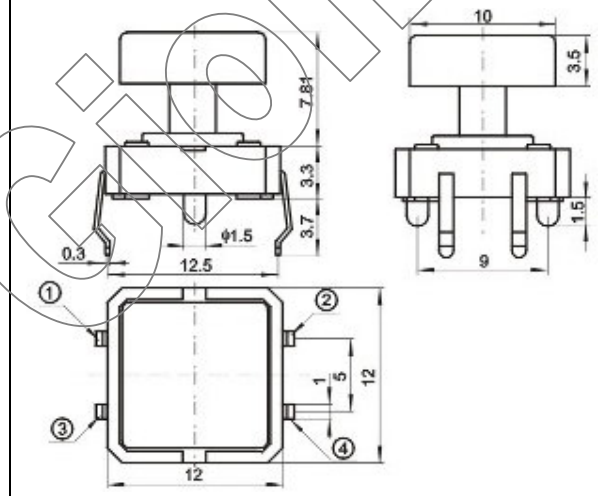	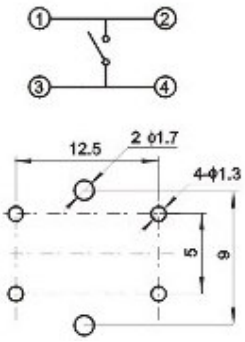

GionTech

Copyright © 1993, 2002, 2008 GionTech Group
info@giontech.com

 TSG-7AT-180H	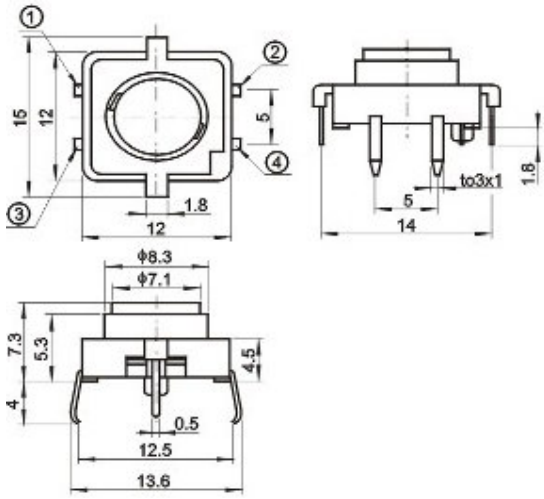	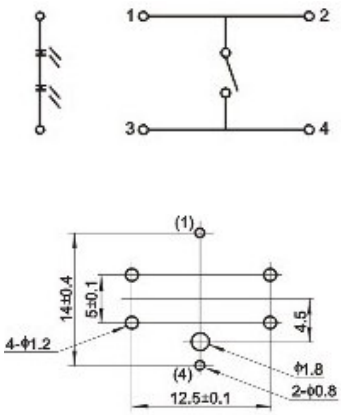

GionTech

Copyright © 1993, 2002, 2008 GionTech Group